EXIT GetSet MB330

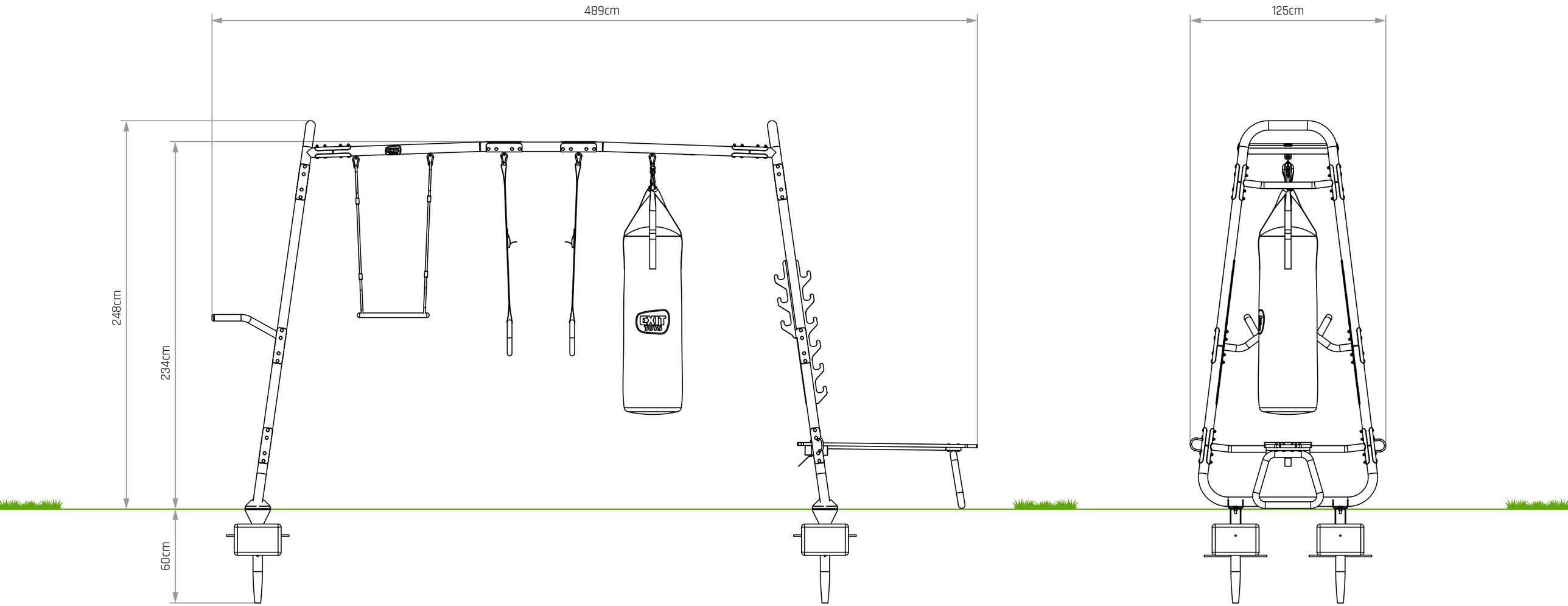
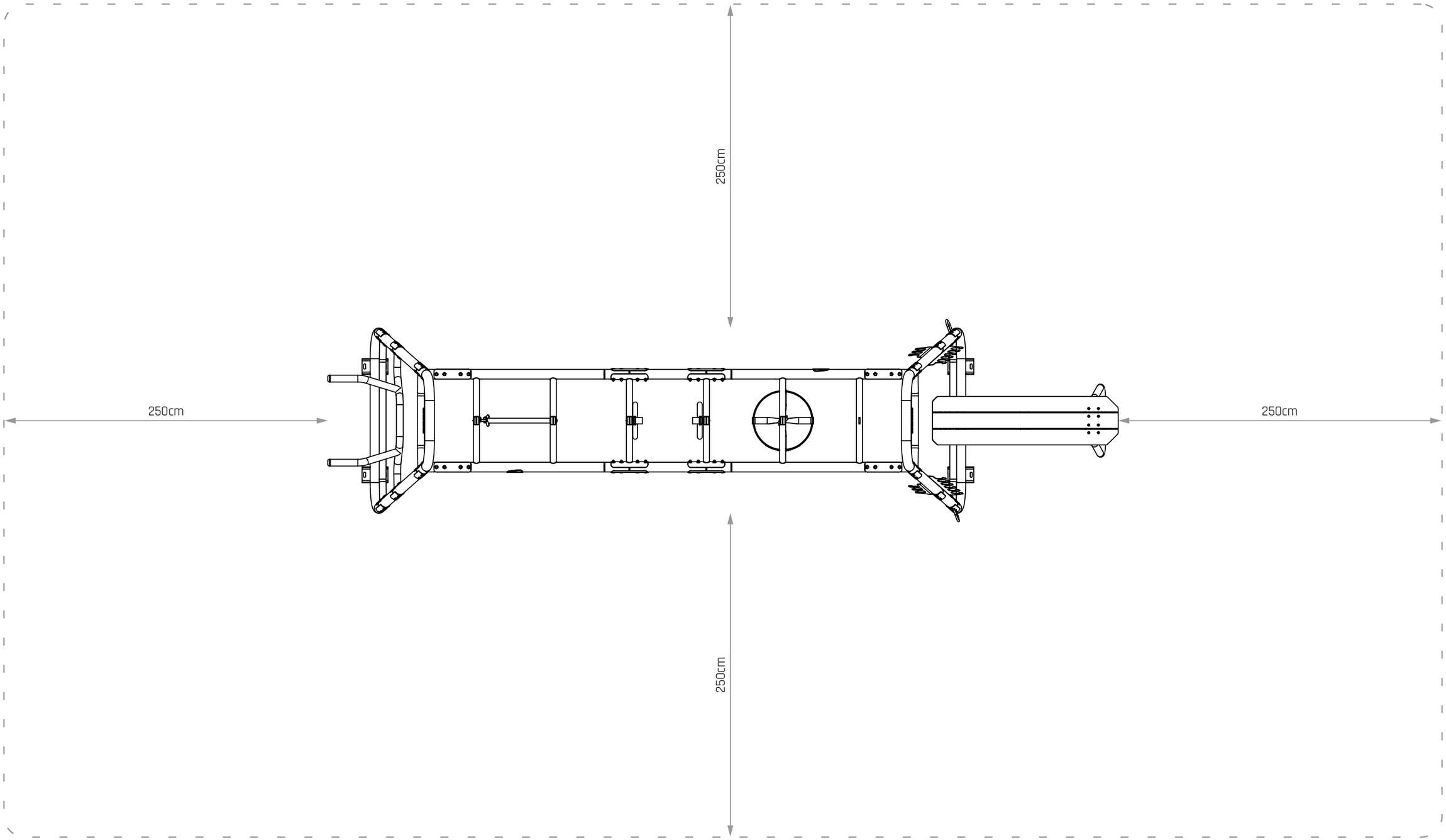
EXIT GetSet MB330